2016 ATV WIRING DIAGRAMS

Page	
1	DVX 90
2	90 Utility
3	150
4	300 Utility
5	Alterra 400
6	Alterra 450
7	XC 450
8	500
9	TRV 700 SE/TBX 700/Mud Pro 700 LTD
10	1000 XT/1000 Mud Pro SE
11	Alterra 500 XT
12	Alterra 550/Alterra 700
13	Alterra 550 XT/Alterra 700 XT
14	HDX 500 XT
15	HDX 700 SE
16	Prowler 700 XT/HDX 700 XT
17	Prowler 1000 XT
18	Wildcat X/X LTD/X SE/4X
19	Wildcat Sport - Wildcat Trail
20	Wildcat Sport XT/LTD/RGSE - Wildcat Trail XT/LTD/SE

ARCTIC CAT®
SHARE OUR PASSION.™

© Arctic Cat Inc., 2016, Thief River Falls, MN 56701 ®™ Trademarks of Arctic Cat Inc., P.O. Box 810, Thief River Falls, MN 56701 p/n 2260-691

Harness
(p/n 3306-119)
DVX 90

1. SWITCH, FRONT BRAKE
2. SWITCH, GEAR SHIFT POSITION
3. SWITCH, IGNITION
4. RELAY, STARTER
5. REGULATOR/RECTIFIER
6. BATTERY, 12V
7. TAILLIGHT/BRAKE LIGHT
8. COIL, IGNITION
9. SPARK PLUG
10. CDI
11. RELAY, LIGHTING
12. MAGNETO
13. SENSOR, CRANKSHAFT POSITION
14. MOTOR, STARTER
15. RESISTOR, #1
16. RESISTOR, #2
17. CONNECTOR, GROUND
18. SWITCH, REAR BRAKE
19. SWITCH, EMERGENCY STOP/START
20. SWITCH, HEADLIGHT/DIMMER
21. LIGHT, NEUTRAL INDICATOR
22. LIGHT, REVERSE GEAR INDICATOR
23. HEADLIGHT

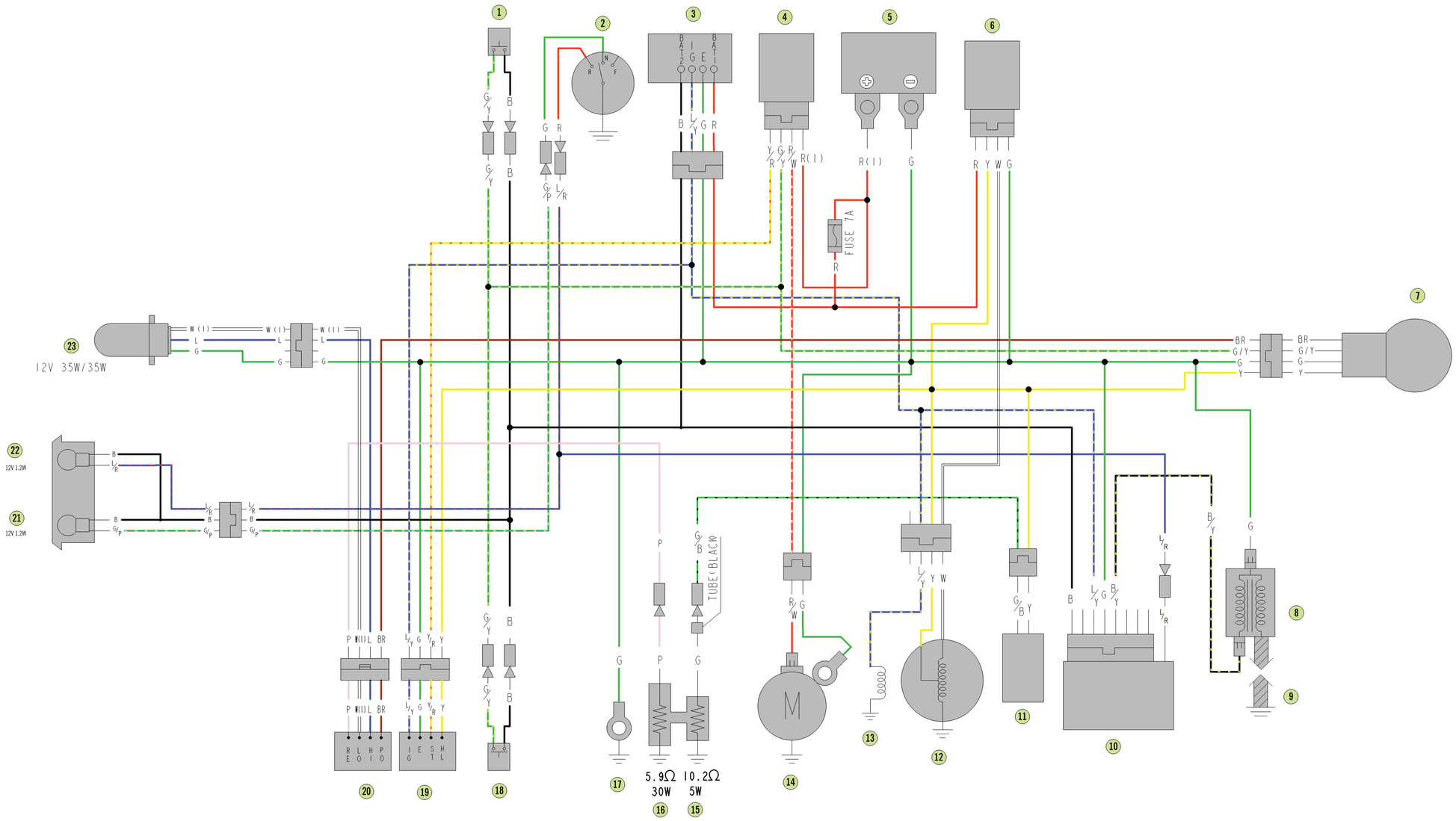

IGNTION SWITCH

	BAT1	IG	E	BAT2
LOCK		○—○		
OFF		○—○		
ON	○			○
COLOR	R	L/Y	G	B

HEADLIGHT/DIMMER SW

	HL	RE	LO	HI	PO
≡D	○		○		○
≡D	○			○	○
COLOR	Y	P	W	L	BR

E-STOP SW

	E	IG
OFF	○—○	
RUN		
COLOR	G	L/Y

START BUTTOM

	ST	E
FREE		
PUSH	○—○	
COLOR	Y/R	G

B	BLACK	P	PINK
G	GREEN	BR	BROWN
O	ORANGE	GR	GRAY
L	BLUE	SB	SKY BLUE
W	WHITE	LG	LIGHT GREEN
Y	YELLOW		
R	RED		

Harness
(p/n 3305-860)
90 Utility

1. SWITCH, FRONT BRAKE
2. SWITCH, GEAR SHIFT POSITION
3. SWITCH, IGNITION
4. RELAY, STARTER
5. BATTERY, 12V
6. REGULATOR/RECTIFIER
7. TAILLIGHT/BRAKE LIGHT
8. COIL, IGNITION
9. SPARK PLUG
10. CDI
11. RELAY, LIGHTING
12. MAGNETO
13. SENSOR, CRANKSHAFT POSITION
14. MOTOR, STARTER
15. RESISTOR, #1
16. RESISTOR, #2
17. CONNECTOR, GROUND
18. SWITCH, REAR BRAKE
19. SWITCH, EMERGENCY STOP/START
20. HEADLIGHT
21. LIGHT, NEUTRAL INDICATOR
22. LIGHT, REVERSE GEAR INDICATOR
23. HEADLIGHT

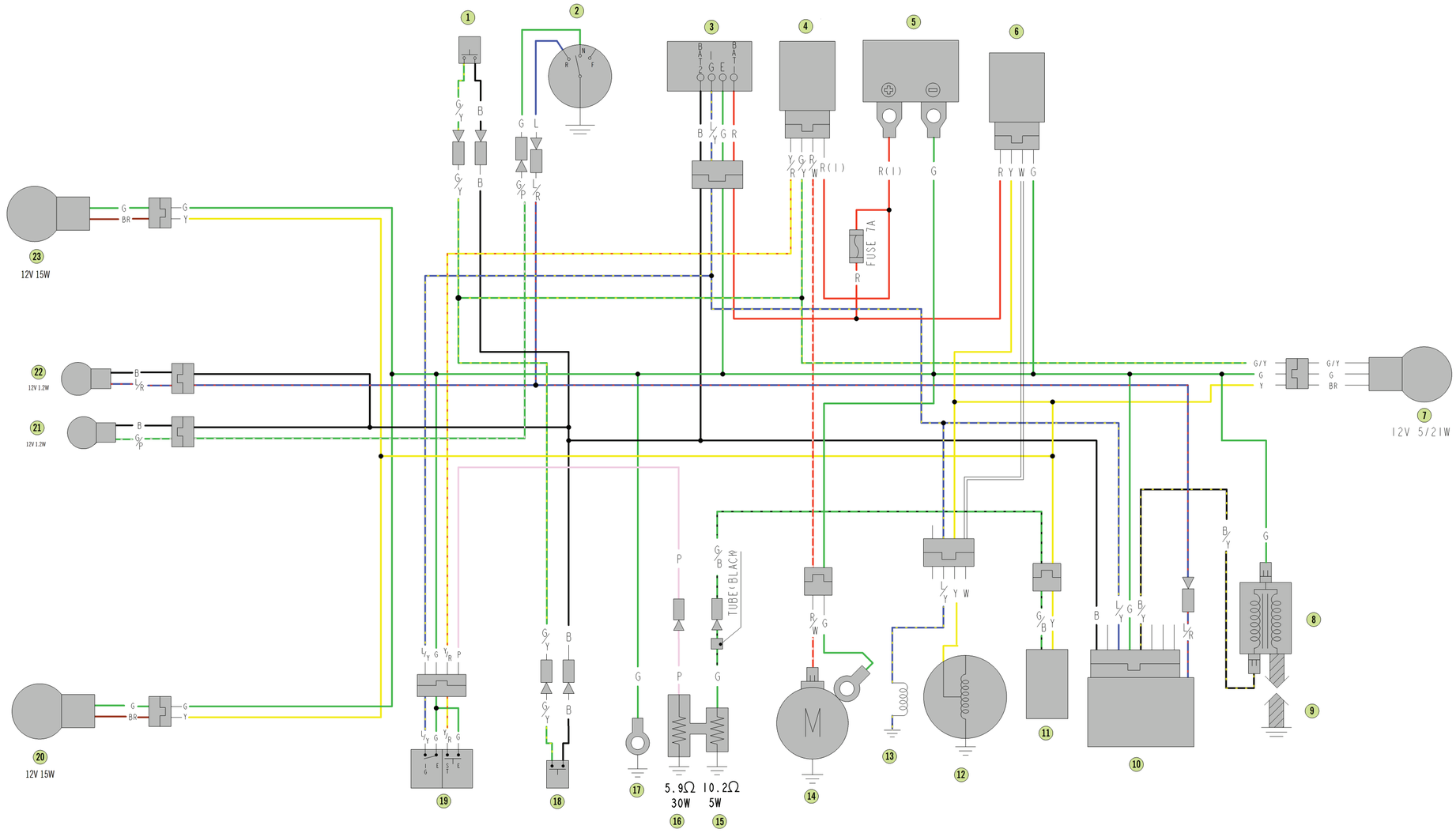

IGNTION SWITCH

	BAT1	IG	E	BAT2
LOCK		○	○	
OFF		○	○	
ON	○			○
COLOR	R	L/Y	G	B

E-STOP SW

	E	IG
OFF	○	○
RUN		
COLOR	G	L/Y

START BUTTOM

	ST	E
FREE		
PUSH	○	○
COLOR	Y/R	G

B	BLACK	P	PINK
G	GREEN	BR	BROWN
O	ORANGE	GR	GRAY
L	BLUE	SB	SKY BLUE
W	WHITE	LG	LIGHT GREEN
Y	YELLOW		
R	RED		

Harness (p/n 3305-748) 150

1. HEADLIGHT/RUNNING LIGHT
2. LIGHTS, INDICATOR
3. HEADLIGHT/RUNNING LIGHT
4. SENSOR, FUEL LEVEL
5. SWITCH, FRONT BRAKE
6. SWITCH, KEY
7. SWITCH, GEAR SHIFT POSITION
8. DIODE, CLUTCH
9. RELAY, START-IN-GEAR
10. SWITCH, REAR BRAKE
11. SOLENOID, STARTER
12. BATTERY, 12V
13. MOTOR, STARTER
14. GROUND, ENGINE/BATTERY
15. LIGHT, TAIL/BRAKE
16. LIGHT, TAIL/BRAKE
17. SENSOR, SPEEDOMETER
18. COIL, IGNITION
19. SPARK PLUG
20. CDI
21. SENSOR, CRANKSHAFT POSITION
22. MAGNETO
23. REGULATOR/RECTIFIER
24. SWITCH, EMERGENCY STOP/START
25. SWITCH, REAR BRAKE
26. SWITCH, HEADLIGHT

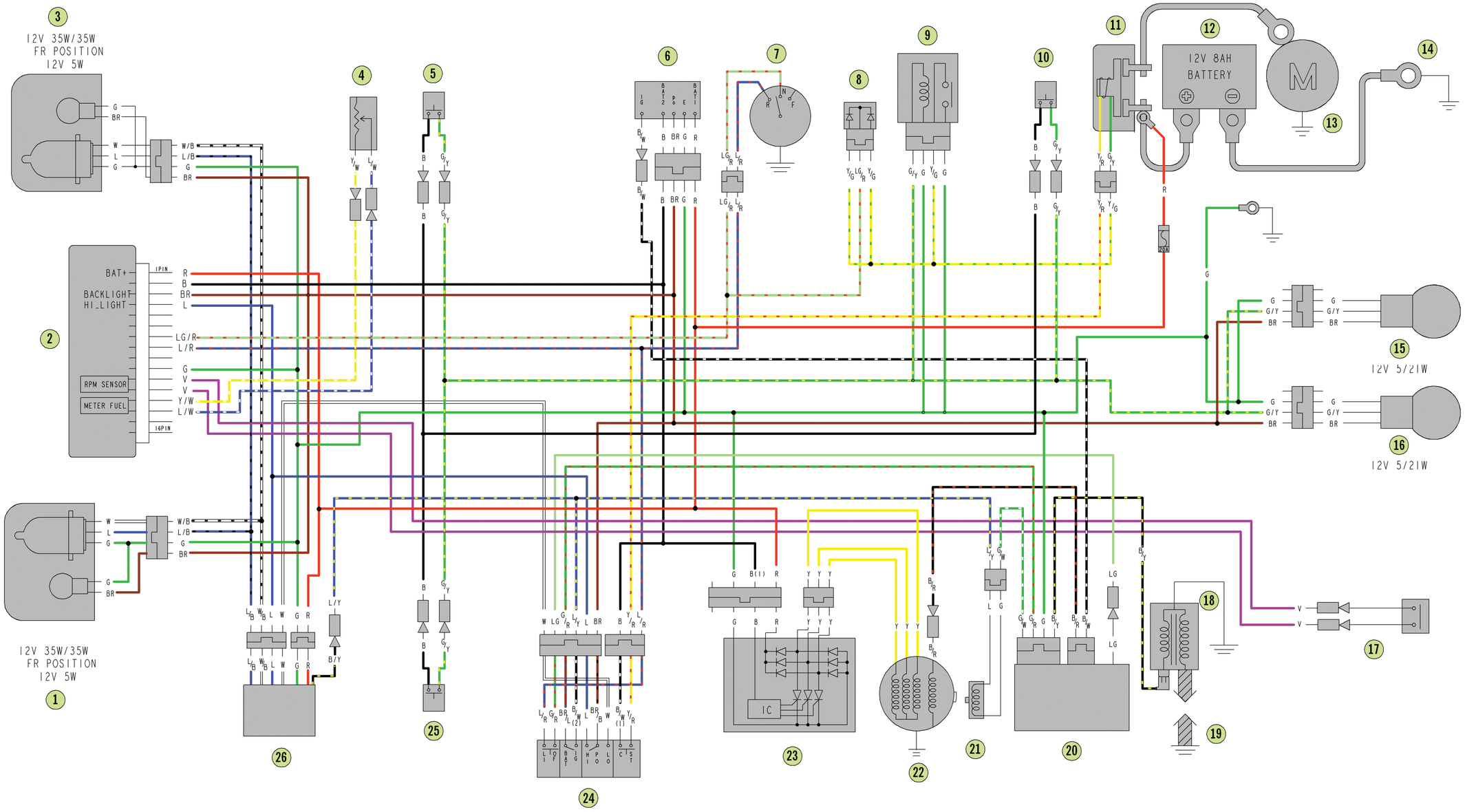

E-STOP SW

	BAT	IG
	○	○
COLOR	BR/L	B/W (2)

START SW

	ST	C
FREE		
PUSH	○	○
COLOR	Y/R	B/W (1)

LIGHT/DIMMER SW

	LO	HI	PO
			○
	○		○
		○	○
COLOR	W	L	BR

OVER RIDE SW

	LI	OF
FREE	○	○
PUSH		
COLOR	L/R	G/R

KEY SW

	IG	E	BAT1	BAT2	PO
OFF	○	○			
ON			○	○	
PO			○	○	○
COLOR	B/W	G	R	B	BR

B	BLACK	BR	BROWN
G	GREEN	GR	GRAY
O	ORANGE	SB	SKY BLUE
L	BLUE	LG	LIGHT GREEN
W	WHITE	V	VIOLET
Y	YELLOW		
R	RED		

Harness
(p/n 3303-838)
300 Utility

1. SENSOR, COOLANT TEMPERATURE
2. FUSE BLOCK
3. SWITCH, KEY
4. SWITCH, GEAR SHIFT POSITION
5. SWITCH, HAND BRAKE
6. DIODE, CLUTCH
7. RELAY
8. SENSOR, FUEL LEVEL
9. SOLENOID, STARTER
10. BATTERY, 12V
11. MOTOR, STARTER
12. GROUND, ENGINE/BATTERY
13. LIGHT, TAIL/BRAKE
14. SENSOR, CRANKSHAFT POSITION
15. MAGNETO
16. REGULATOR/RECTIFIER
17. COIL, IGNITION
18. SPARK PLUG
19. CDI
20. SWITCH, COOLANT TEMPERATURE
21. MOTOR, FAN
22. SWITCH, FOOT BRAKE
23. SWITCH, EMERGENCY STOP/START
24. SWITCH, HEADLIGHT
25. HEADLIGHT/RUNNING LIGHT
26. LIGHTS, INDICATOR
27. HEADLIGHT/RUNNING LIGHT

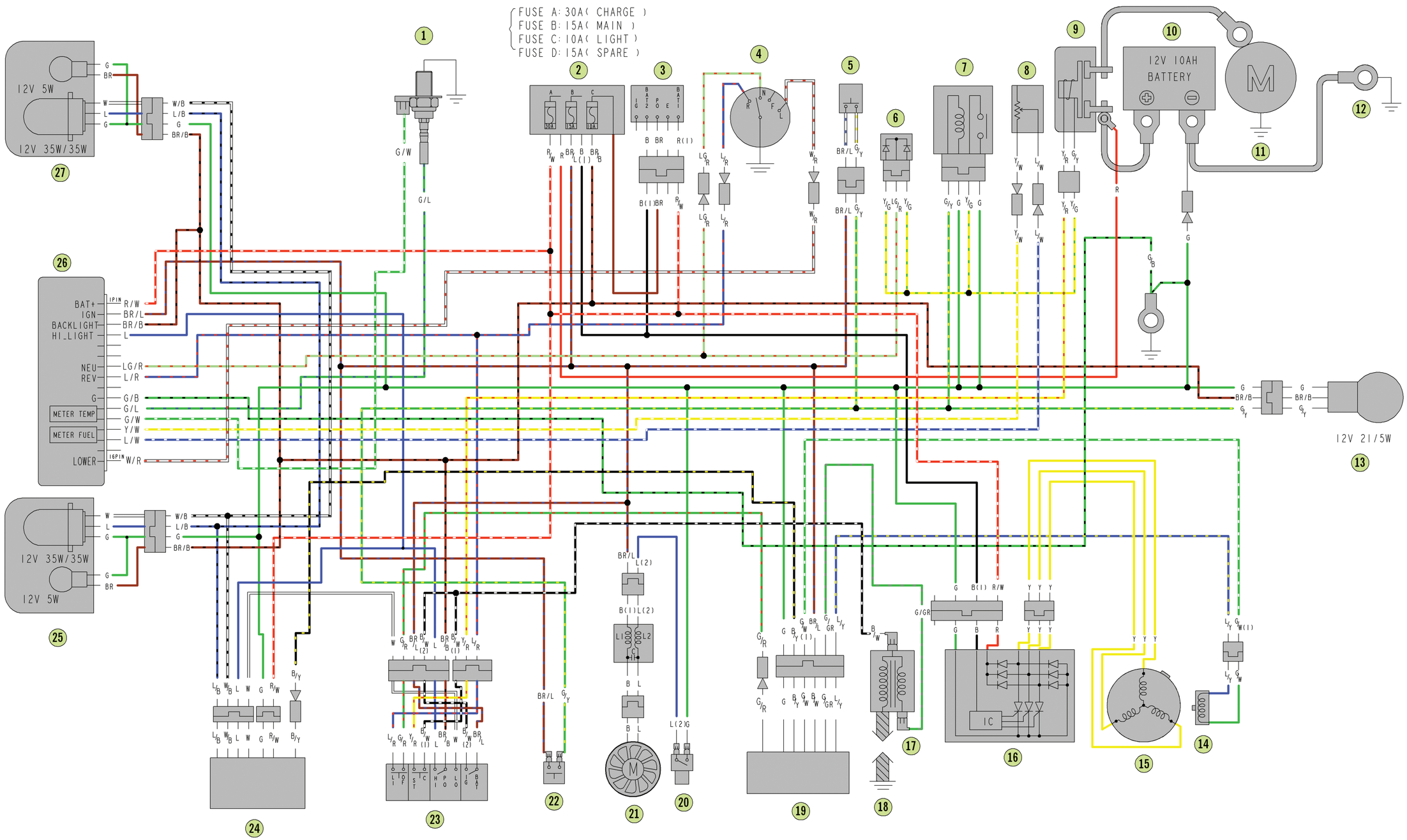

OVER RIDE SW

	LI	OF
FREE	○	○
PUSH		
COLOR	L/R	G/R

START BUTTOM

	ST	C
FREE		
PUSH	○	○
COLOR	Y/R	B/W (1)

DIMMER SW

	PO	LO	HI
≡D ⊂≡	○		
≡D	○	○	
≡D	○		○
COLOR	BR/B	W	L

E-STOP SW

	BAT	IG
◯	○	○
⊗		
COLOR	BR/L	B/W (2)

COMB SW

	IG	E	BAT1	BAT2	PO
OFF	○	○			
ON			○	○	
PO			○	○	○
COLOR	B/W	G	R	B	BR

B	BLACK	BR	BROWN
G	GREEN	GR	GRAY
O	ORANGE	SB	SKY BLUE
L	BLUE	LG	LIGHT GREEN
W	WHITE		
Y	YELLOW		
R	RED		

Main Harness (p/n 3307-178) Alterra 400

1. CONNECTOR, SWITCHED ACCESSORY
2. SENSOR, OIL TEMPERATURE
3. SENSOR, COOLANT TEMPERATURE
4. MOTOR, FAN
5. ACTUATOR, 2WD/4WD
6. SWITCH, 2WD/4WD
7. REGULATOR/RECTIFIER
8. SENSOR, FUEL LEVEL/PUMP, FUEL
9. SWITCH, KEY
10. SWITCH, GEAR
11. SWITCH, ACCESSORY
12. CONNECTOR, ACCESSORY
13. SWITCH, REAR BRAKE
14. SOLENOID, STARTER
15. BATTERY, 12V
16. MOTOR, STARTER
17. CONNECTOR, ENGINE/BATTERY GROUND
18. LIGHT, TAIL/BRAKE/BACKUP
19. CONNECTOR, REAR ACCESSORY
20. LIGHT, TAIL/BRAKE/BACKUP
21. SENSOR, CRANKSHAFT POSITION
22. MAGNETO
23. SENSOR, SPEEDOMETER
24. SWITCH, ENGINE STOP/START, LH CONTROL
25. PDM
26. COIL, IGNITION
27. CONNECTOR, ECU
28. SWITCH, FRONT BRAKE
29. LIGHT, RUNNING
30. HEADLIGHT
31. CONNECTOR, SPEEDO/INDICATOR LIGHTS
32. HEADLIGHT
33. LIGHT, RUNNING

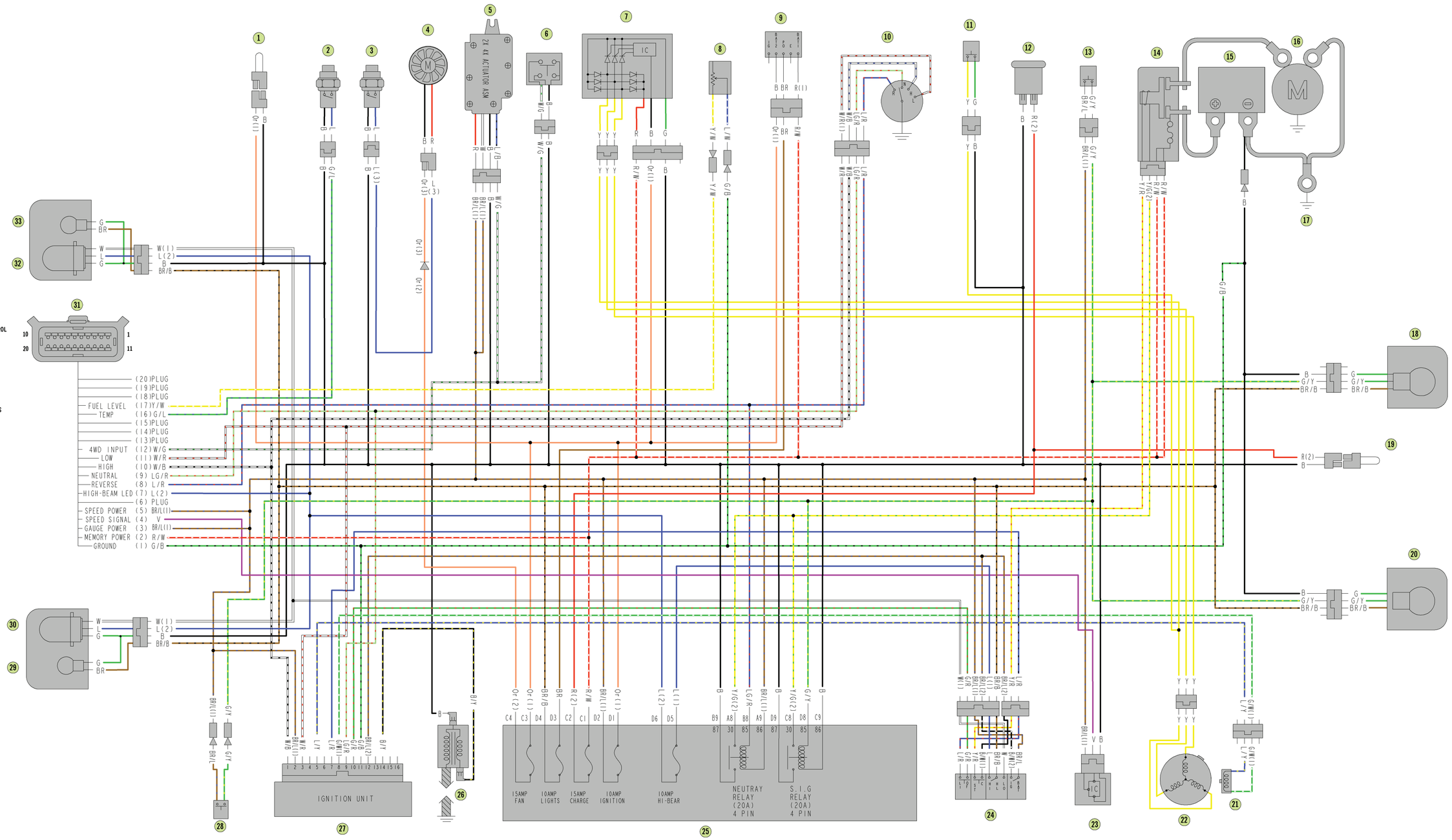

DIMMER SWITCH

	HL	LO	HI
	○	—○	
	○	—○	—○
COLOR	BR/B	W	L

EMERGENCY SWITCH

	E	IG
○		
⊗	○	—○
COLOR	BR/L	B/W (2)

PUSH START SWITCH

	ST	C
FREE		
PUSH	○	—○
COLOR	Y/R	B/W(1)

OVER RIDE SWITCH

	LI	OF
FREE		
PUSH	○	—○
COLOR	L/R	G/R

2WD/4WD SWITCH

	C	4WD
2WD		
4WD	○	—○
COLOR	B	W/G

KEY SWITCH

	IG	E	BAT1	BAT2	PO
OFF	○	—○			
ON			○	—○	
PO			○	—○	—○
COLOR			R	B	BR

B	BLACK	BR	BROWN
G	GREEN	GR	GRAY
Or	ORANGE	SB	SKY BLUE
L	BLUE	LG	LIGHT GREEN
W	WHITE		
Y	YELLOW		
R	RED		

Main Harness (p/n 3307-193) Alterra 450

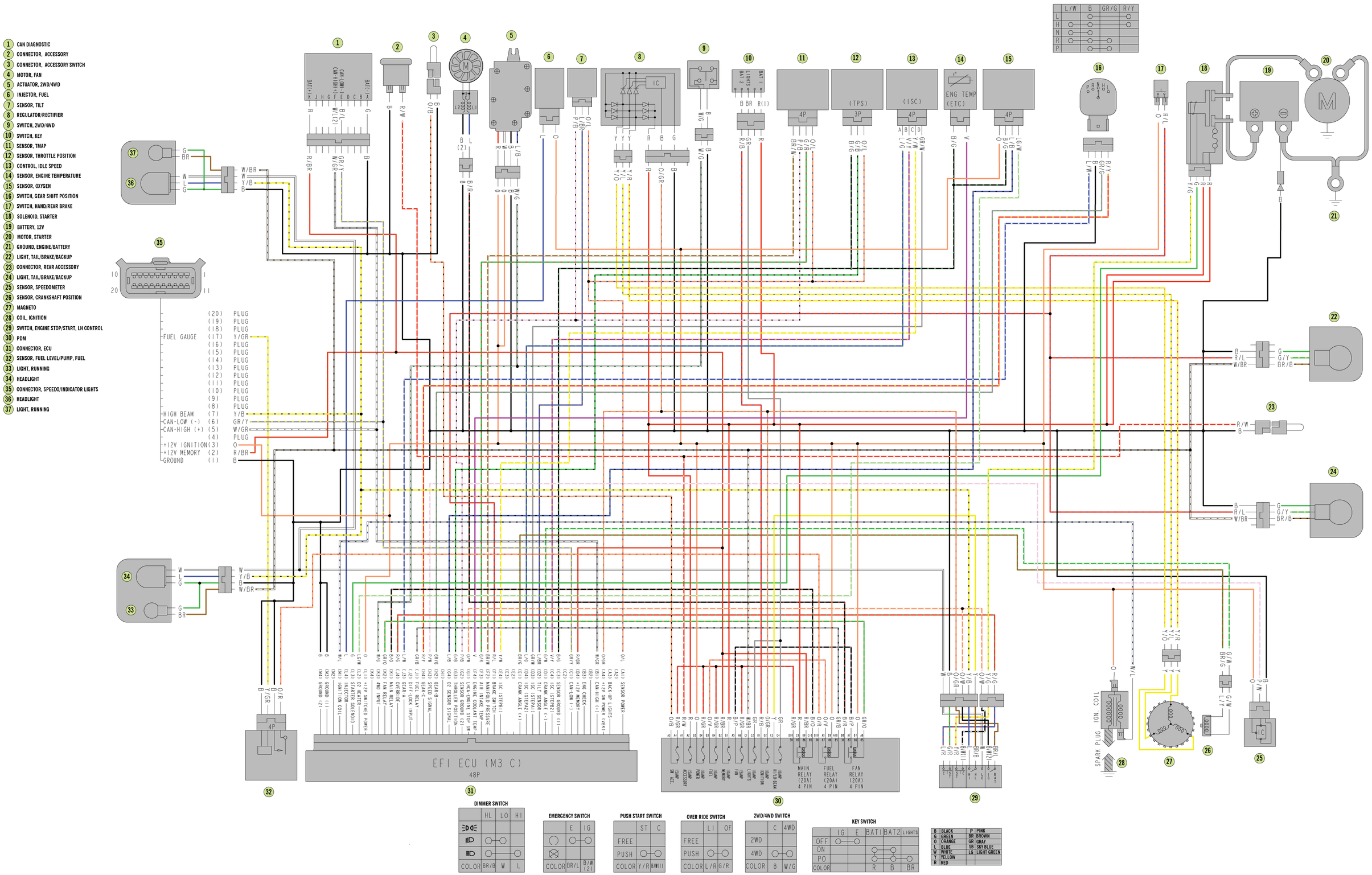

Main Harness (p/n 3306-879) XC 450

1. SWITCH, FRONT BRAKE
2. CAN DIAGNOSTIC
3. CONNECTOR, SWITCHED ACESSORY
4. MOTOR, FAN
5. ACTUATOR, 2WD/4WD
6. INJECTOR, FUEL
7. SENSOR, TILT
8. REGULATOR/RECTIFIER
9. SWITCH, 2WD/4WD
10. SWITCH, KEY
11. SENSOR, TMAP
12. SENSOR, THROTTLE POSITION
13. CONTROL, IDLE SPEED
14. SENSOR, ENGINE TEMPERATURE
15. SENSOR, OXYGEN
16. SWITCH, GEAR SHIFT POSITION
17. SWITCH, FOOT BRAKE
18. SOLENOID, STARTER
19. BATTERY, 12V
20. MOTOR, STARTER
21. GROUND, ENGINE/BATTERY
22. LIGHT, TAIL/BRAKE/BACKUP
23. CONNECTOR, REAR ACCESSORY
24. LIGHT, TAIL/BRAKE/BACKUP
25. SENSOR, SPEEDOMETER
26. SENSOR, CRANKSHAFT POSITION
27. MAGNETO
28. COIL, IGNITION
29. SPARK PLUG
30. SWITCH, ENGINE STOP/START, LH CONTROL
31. PDM
32. CONNECTOR, ECU
33. SENSOR, FUEL LEVEL/PUMP, FUEL
34. LIGHT, RUNNING
35. HEADLIGHT
36. CONNECTOR, SPEEDO/INDICATOR LIGHTS
37. LIGHT, FRONT POSITION RUNNING
38. HEADLIGHT
39. LIGHT, RUNNING

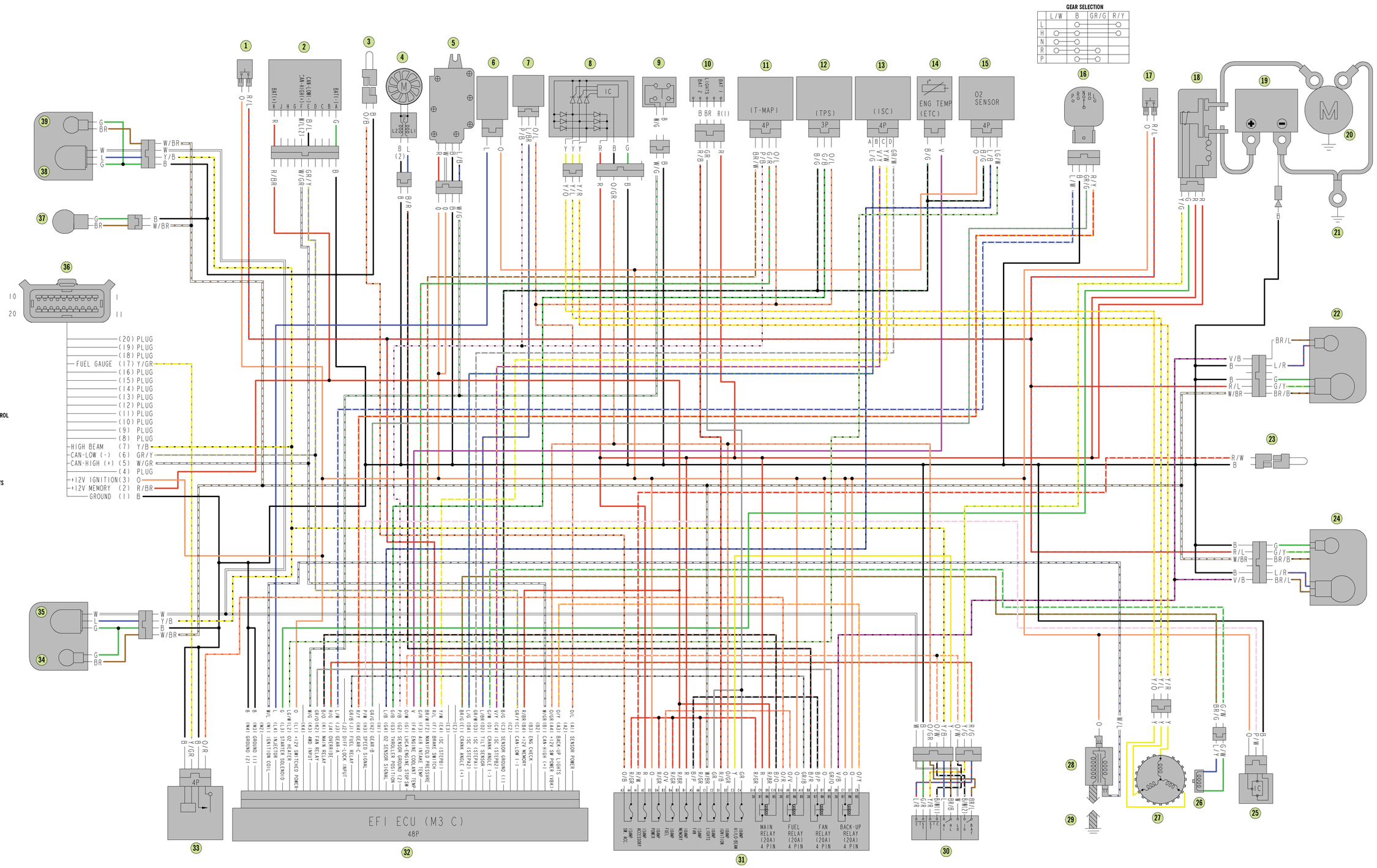

BRAKE SWITCH

	IG	BAT
ON		
OFF	○	○
COLOR	B/W (2)	BR/L

DIMMER SW

	HL	LO	HI
	○	○	
	○		○
COLOR	BR/B	W	L

START BUTTOM

	ST	C
FREE		
PUSH	○	○
COLOR	Y/R	Y/BR

2WD/4WD SW

	C	4WD
2WD		
4WD	○	○
COLOR	B	W/G

KEY SW

	IG	E	BAT1	BAT2	PO
OFF	○	○			
ON			○	○	
PO			○	○	○
COLOR	B/W	G	R	B	BR

WIRE COLOR KEY

B	BLACK	BR	BROWN
G	GREEN	GR	GRAY
O	ORANGE	SB	SKY BLUE
L	BLUE	LG	LIGHT GREEN
W	WHITE	V	VIOLET
Y	YELLOW	P	PINK
R	RED		

Main Harness (p/n 0486-479) 500

1. SWITCH, ENGINE STOP
2. SWITCH, REVERSE OVERRIDE
3. SWITCH, 2WD/4WD/DIFFERENTIAL LOCK
4. GAUGE, LCD
5. SWITCH, KEY
6. SWITCH, HAND BRAKE
7. SENSOR, OXYGEN
8. CONNECTOR, DIAGNOSTICS
9. ECM
10. COIL, IGNITION
11. SENSOR, FUEL LEVEL/PUMP, FUEL
12. INJECTOR, FUEL
13. SENSOR, SPEEDOMETER
14. SOLENOID, STARTER
15. MOTOR, STARTER
16. BATTERY, 12V
17. CONNECTOR, ENGINE/BATTERY GROUND
18. CONNECTOR, REAR ACCESSORY
19. TAILLIGHT
20. REGULATOR/RECTIFIER
21. MAGNETO
22. SENSOR, CRANKSHAFT POSITION
23. SENSOR, TILT
24. SENSOR, TEMPERATURE/MANIFOLD ABSOLUTE PRESSURE
25. SENSOR, COOLANT TEMPERATURE
26. CONTROL, IDLE SPEED
27. SENSOR, THROTTLE POSITION
28. SWITCH, GEAR
29. SWITCH, FOOT BRAKE
30. PDM
31. MOTOR, FAN
32. ACTUATOR, 2WD/4WD
33. HEADLIGHT, LOW BEAM LH
34. HEADLIGHT, HIGH BEAM LH
35. CONNECTOR, FRONT ACCESSORY
36. CONNECTOR, REAR SWITCHED ACCESSORY
37. CONNECTOR, FRONT SWITCHED ACCESSORY
38. HEADLIGHT, LOW BEAM RH
39. HEADLIGHT, HIGH BEAM RH

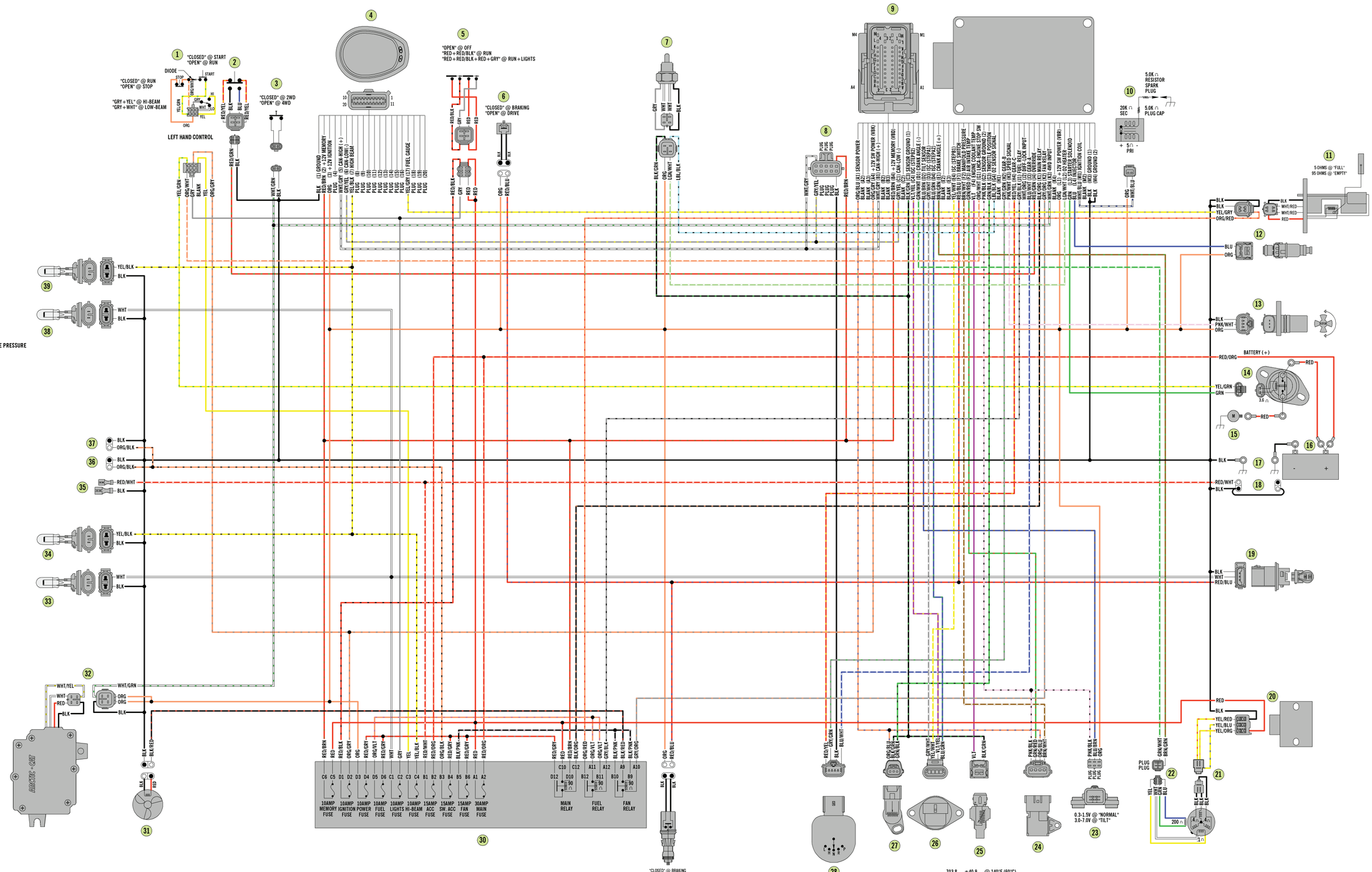

NOTES

1. CONNECTORS VIEWED FROM MATING SURFACE SIDE.

2. ● MOLDED CONNECTOR MALE PIN TERMINAL
   ○ MOLDED CONNECTOR FEMALE RECEPTACLE TERMINAL

3. GRY/YEL AND WHT/GRY ARE TWISTED PAIR.

Main Harness
(p/n 0486-483)
TRV 700 SE
(p/n 0486-485)
700 TBX
(p/n 0486-486)
700 Mud Pro LTD

1. SWITCH, ENGINE STOP
2. SWITCH, REVERSE OVERRIDE
3. SWITCH, 2WD/4WD/DIFFERENTIAL LOCK
4. GAUGE, LCD
5. SWITCH, KEY
6. SWITCH, HAND BRAKE
7. ELEMENT, LEFT HANDWARMER
8. SWITCH, HANDWARMER/THUMBWARMER
9. ELEMENT, THUMBWARMER
10. ELEMENT, RIGHT HANDWARMER
11. CONNECTOR, DIAGNOSTICS
12. ECU
13. COIL, IGNITION
14. SENSOR, OXYGEN
15. SENSOR, FUEL LEVEL/PUMP, FUEL
16. INJECTOR, FUEL
17. SENSOR, SPEEDOMETER
18. SOLENOID, STARTER
19. MOTOR, STARTER
20. BATTERY, 12V
21. CONNECTOR, ENGINE/BATTERY GROUND
22. CONNECTOR, REAR ACCESSORY
23. TAILLIGHT
24. ELEMENT, LEFT PASSENGER HANDWARMER
25. SWITCH, PASSENGER HANDWARMER
26. ELEMENT, RIGHT PASSENGER HANDWARMER
27. REGULATOR/RECTIFIER
28. MAGNETO
29. SENSOR, CRANKSHAFT POSITION
30. ELECTRONIC POWER STEERING
31. SENSOR, TILT
32. SENSOR, MANIFOLD ABSOLUTE PRESSURE
33. SENSOR, AIR TEMPERATURE
34. SENSOR, COOLANT TEMPERATURE
35. CONTROL, IDLE SPEED
36. SENSOR, THROTTLE POSITION
37. SWITCH, GEAR
38. SWITCH, FOOT BRAKE
39. PDM
40. MOTOR, FAN
41. ACTUATOR, 2WD/4WD
42. HEADLIGHT, LOW BEAM LH
43. HEADLIGHT, HIGH BEAM LH
44. CONNECTORS, FRONT ACCESSORY
45. CONNECTOR, REAR SWITCHED ACCESSORY
46. CONNECTOR, FRONT SWITCHED ACCESSORY
47. HEADLIGHT, LOW BEAM RH
48. HEADLIGHT, HIGH BEAM RH

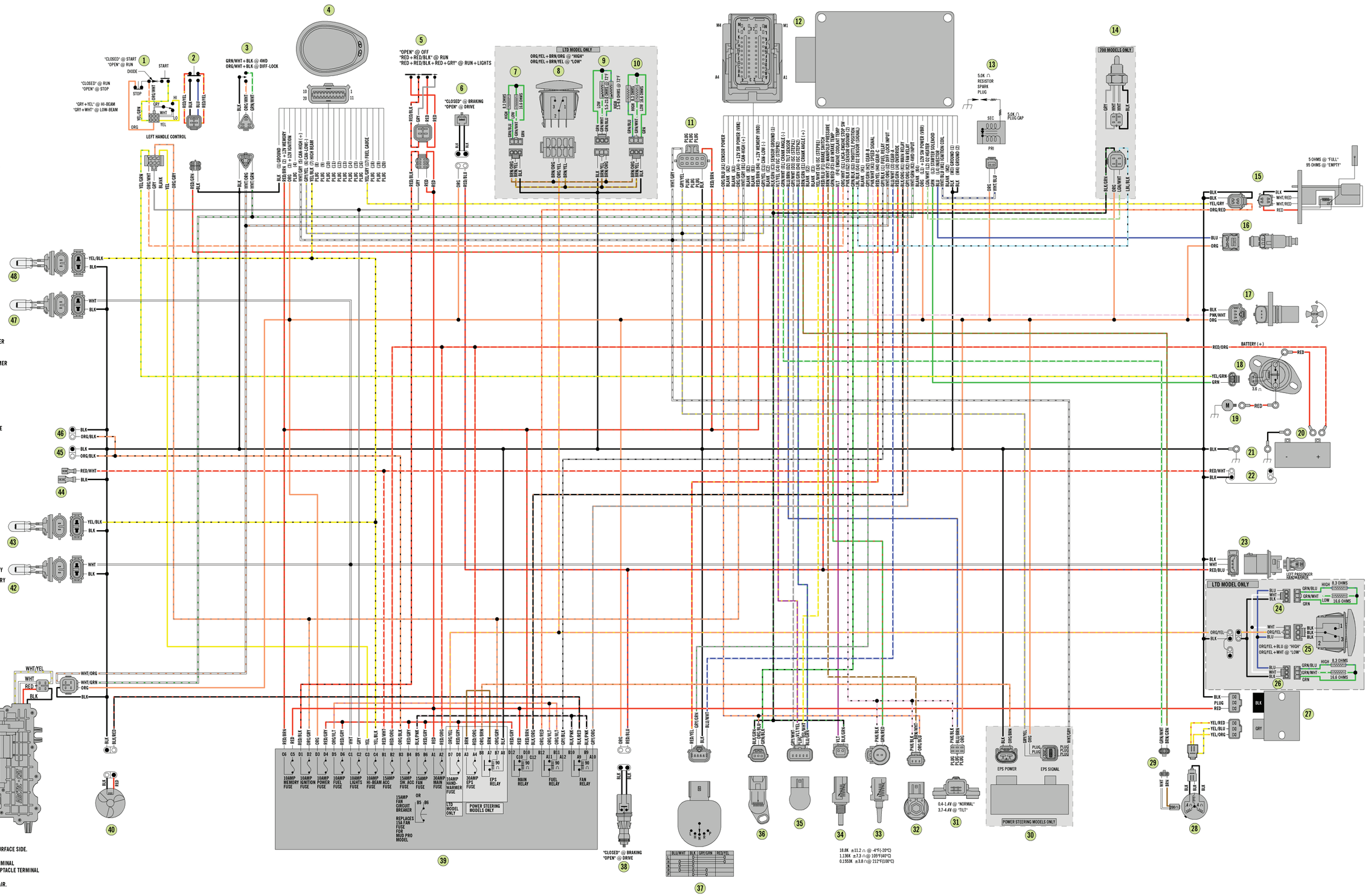

NOTES

1. CONNECTORS VIEWED FROM MATING SURFACE SIDE.
2. ● MOLDED CONNECTOR MALE PIN TERMINAL
   ○ MOLDED CONNECTOR FEMALE RECEPTACLE TERMINAL
3. GRY/YEL AND WHT/GRY ARE TWISTED PAIR.

Main Harness
(p/n 0486-455)
1000 XT
(p/n 0486-505)
1000 Mud Pro SE

1. SWITCH, ENGINE STOP
2. SWITCH, REVERSE OVERRIDE
3. SWITCH, 2WD/4WD/DIFFERENTIAL LOCK
4. GAUGE, LCD
5. SWITCH, KEY
6. SWITCH, HAND BRAKE
7. SENSOR, OXYGEN
8. ELEMENT, LEFT HANDWARMER
9. SWITCH, HANDWARMER/THUMBWARMER
10. ELEMENT, THUMBWARMER
11. ELEMENT, RIGHT HANDWARMER
12. CONNECTOR, DIAGNOSTICS
13. ECU
14. COIL, IGNITION
15. COIL, IGNITION
16. SENSOR, FUEL LEVEL/PUMP, FUEL
17. INJECTOR, FUEL
18. INJECTOR, FUEL
19. SENSOR, SPEEDOMETER
20. SOLENOID, STARTER
21. MOTOR, STARTER
22. BATTERY, 12V
23. CONNECTOR, ENGINE/BATTERY GROUND
24. CONNECTOR, REAR ACCESSORY
25. TAILLIGHT
26. ELEMENT, LEFT PASSENGER HANDWARMER
27. SWITCH, PASSENGER HANDWARMER
28. ELEMENT, RIGHT PASSENGER HANDWARMER
29. REGULATOR/RECTIFIER
30. MAGNETO
31. SENSOR, CRANKSHAFT POSITION
32. SENSOR, TILT
33. SENSOR, MANIFOLD ABSOLUTE PRESSURE
34. SENSOR, AIR TEMPERATURE
35. SENSOR, COOLANT TEMPERATURE
36. CONTROL, IDLE SPEED
37. SENSOR, THROTTLE POSITION
38. SWITCH, GEAR
39. ELECTRONIC POWER STEERING
40. SWITCH, FOOT BRAKE
41. PDM
42. MOTOR, FAN
43. ACTUATOR, 2WD/4WD
44. HEADLIGHT, LOW BEAM LH
45. HEADLIGHT, HIGH BEAM LH
46. CONNECTORS, FRONT ACCESSORY
47. CONNECTOR, REAR SWITCHED ACCESSORY
48. CONNECTOR, FRONT SWITCHED ACCESSORY
49. HEADLIGHT, LOW BEAM RH
50. HEADLIGHT, HIGH BEAM RH

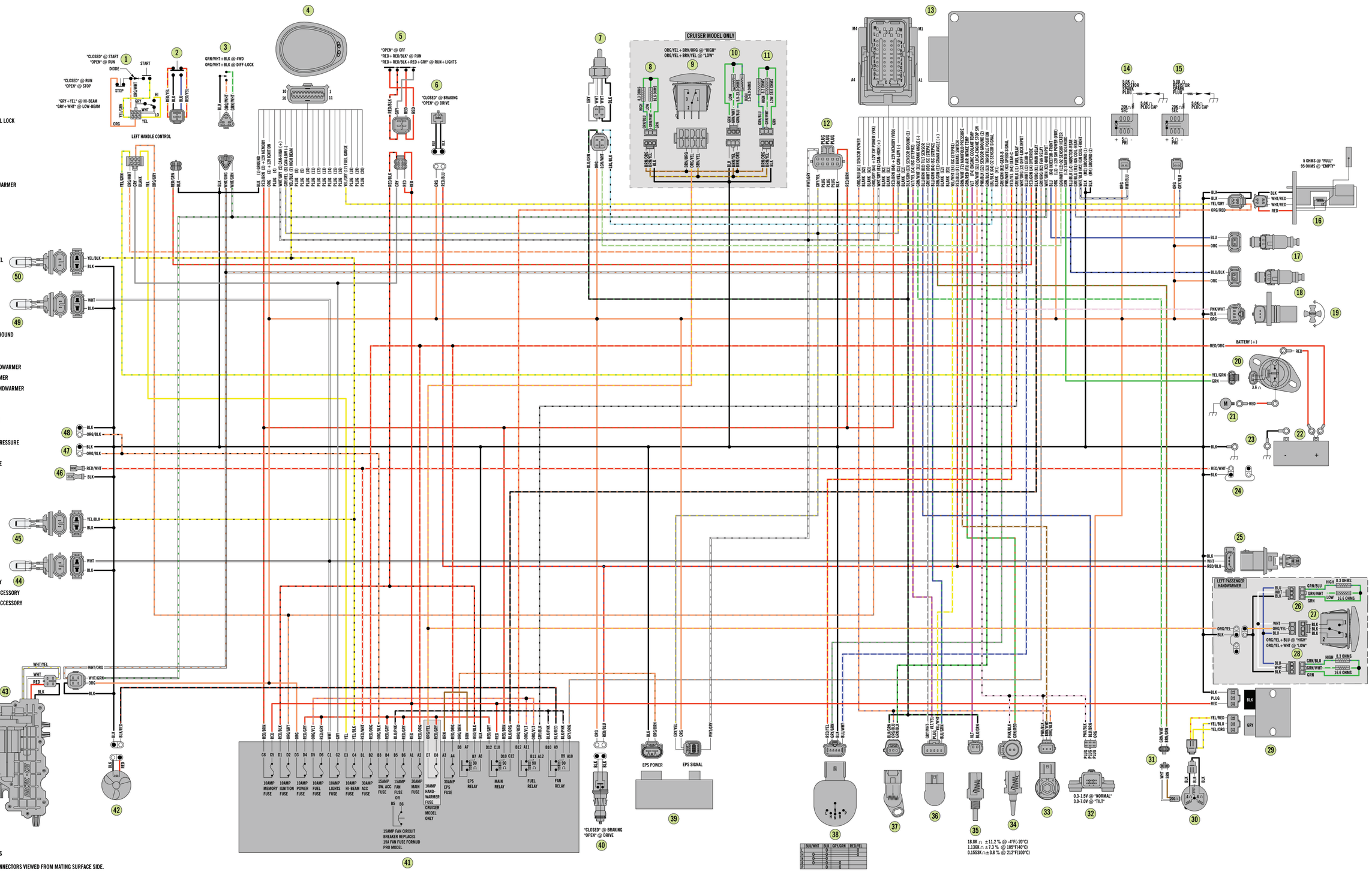

NOTES

1. CONNECTORS VIEWED FROM MATING SURFACE SIDE.
2. ● MOLDED CONNECTOR MALE PIN TERMINAL
   ○ MOLDED CONNECTOR FEMALE RECEPTACLE TERMINAL
3. GRY/YEL AND WHT/GRY ARE TWISTED PAIR.

Main Harness
Alterra 500 XT
(p/n 0486-511)

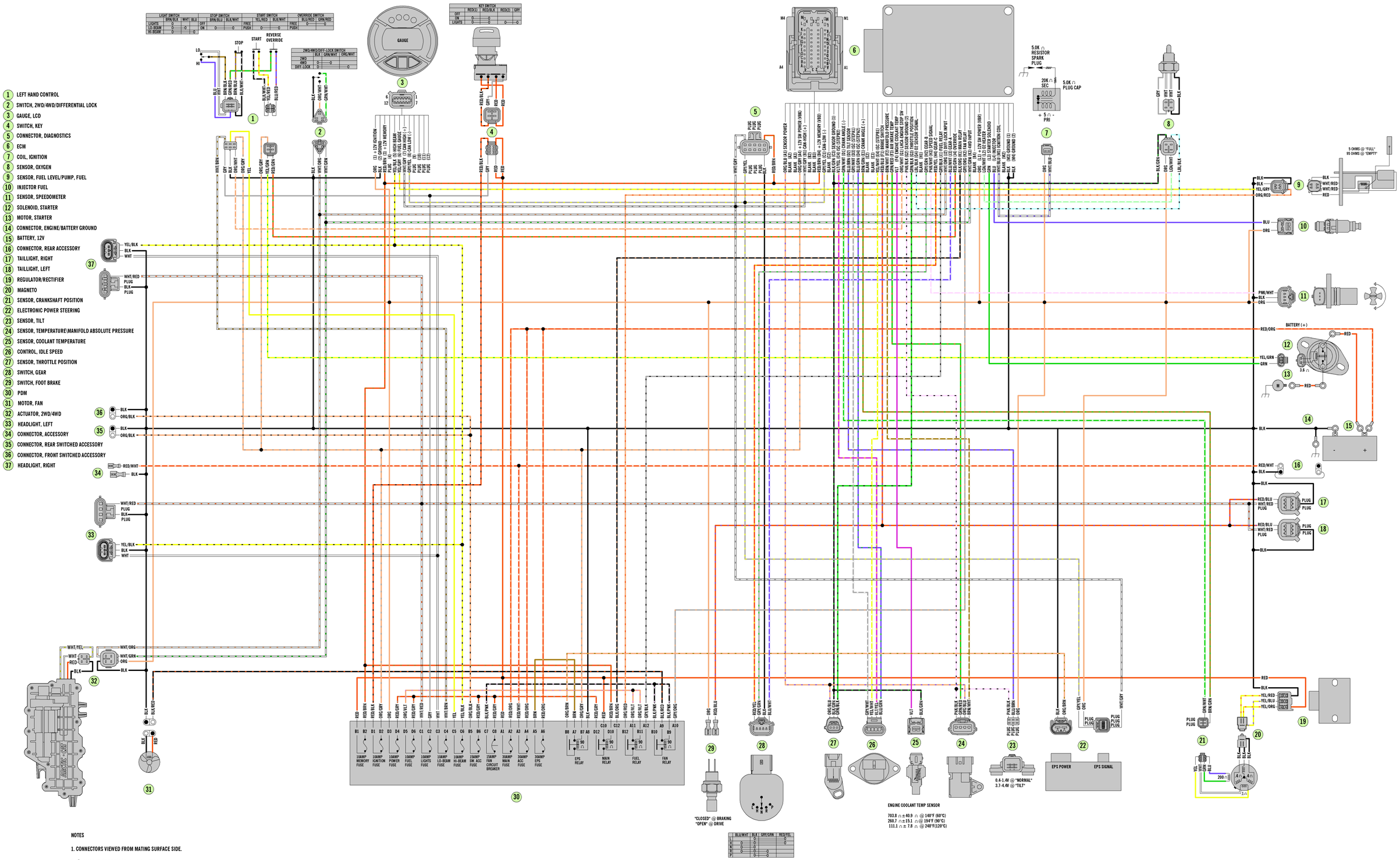

NOTES

1. CONNECTORS VIEWED FROM MATING SURFACE SIDE.

2. ● MOLDED CONNECTOR MALE PIN TERMINAL
   ○ MOLDED CONNECTOR FEMALE RECEPTACLE TERMINAL

3. GRY/YEL AND WHT/GRY ARE TWISTED PAIR.

Main Harness (p/n 0486-533) Alterra 550 Alterra 700

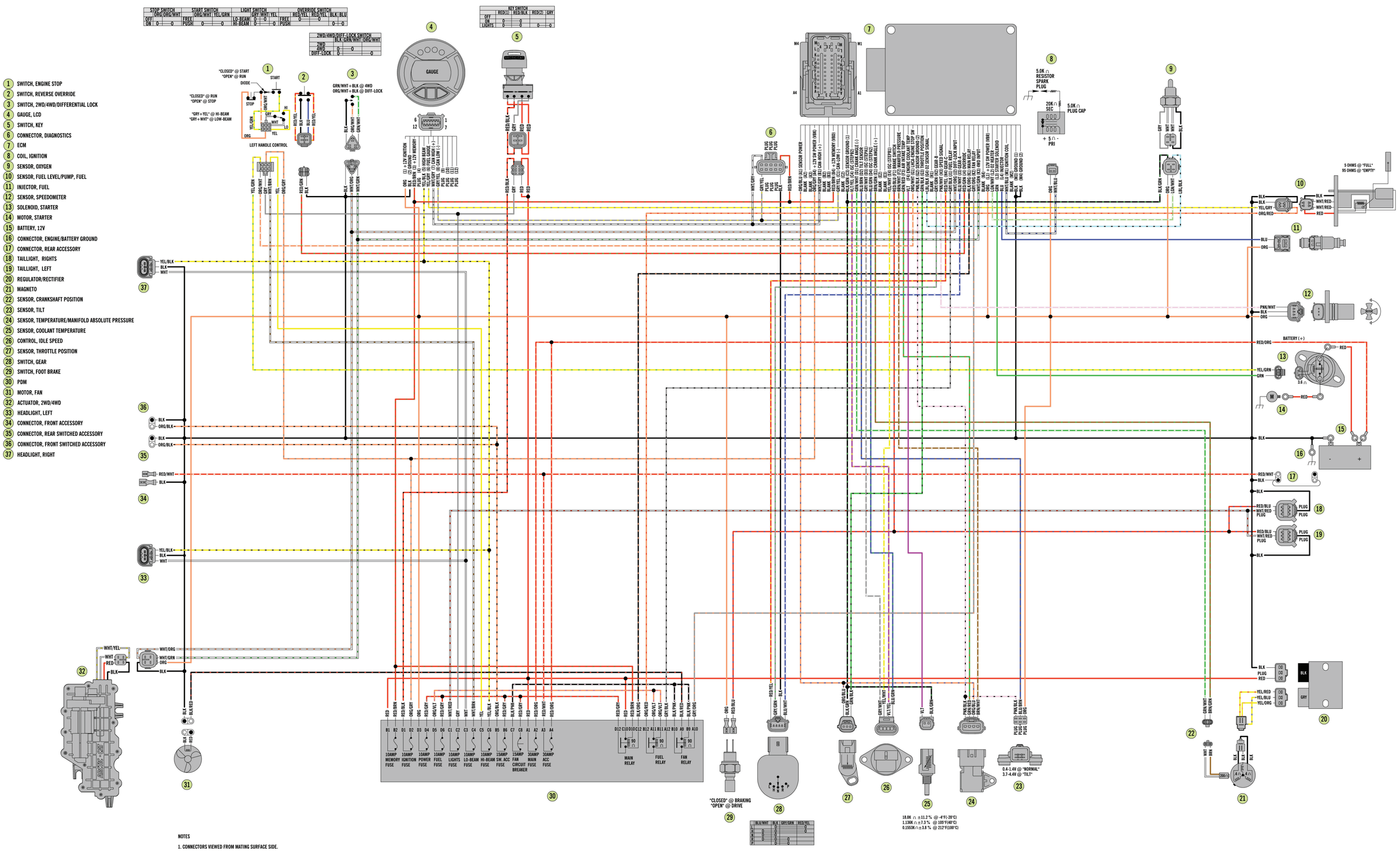

NOTES

1. CONNECTORS VIEWED FROM MATING SURFACE SIDE.
2. ● MOLDED CONNECTOR MALE PIN TERMINAL
   ○ MOLDED CONNECTOR FEMALE RECEPTACLE TERMINAL
3. GRY/YEL AND WHT/GRY ARE TWISTED PAIR.

Main Harness (p/n 0486-534) Alterra 550 XT/ Alterra 700 XT

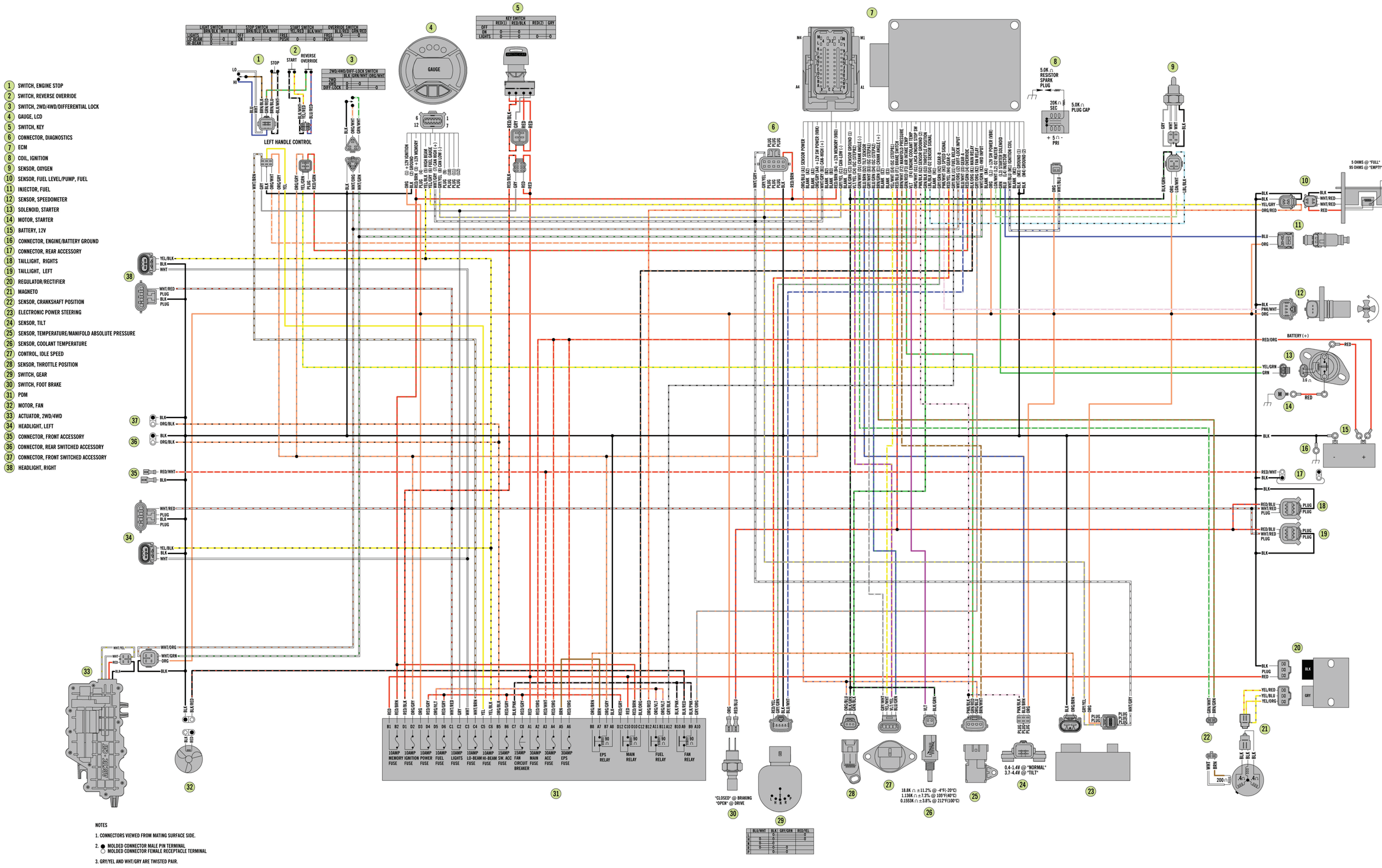

NOTES

1. CONNECTORS VIEWED FROM MATING SURFACE SIDE.
2. ● MOLDED CONNECTOR MALE PIN TERMINAL
   ○ MOLDED CONNECTOR FEMALE RECEPTACLE TERMINAL
3. GRY/YEL AND WHT/GRY ARE TWISTED PAIR.

Main Harness (p/n 0486-527) HDX 500 XT

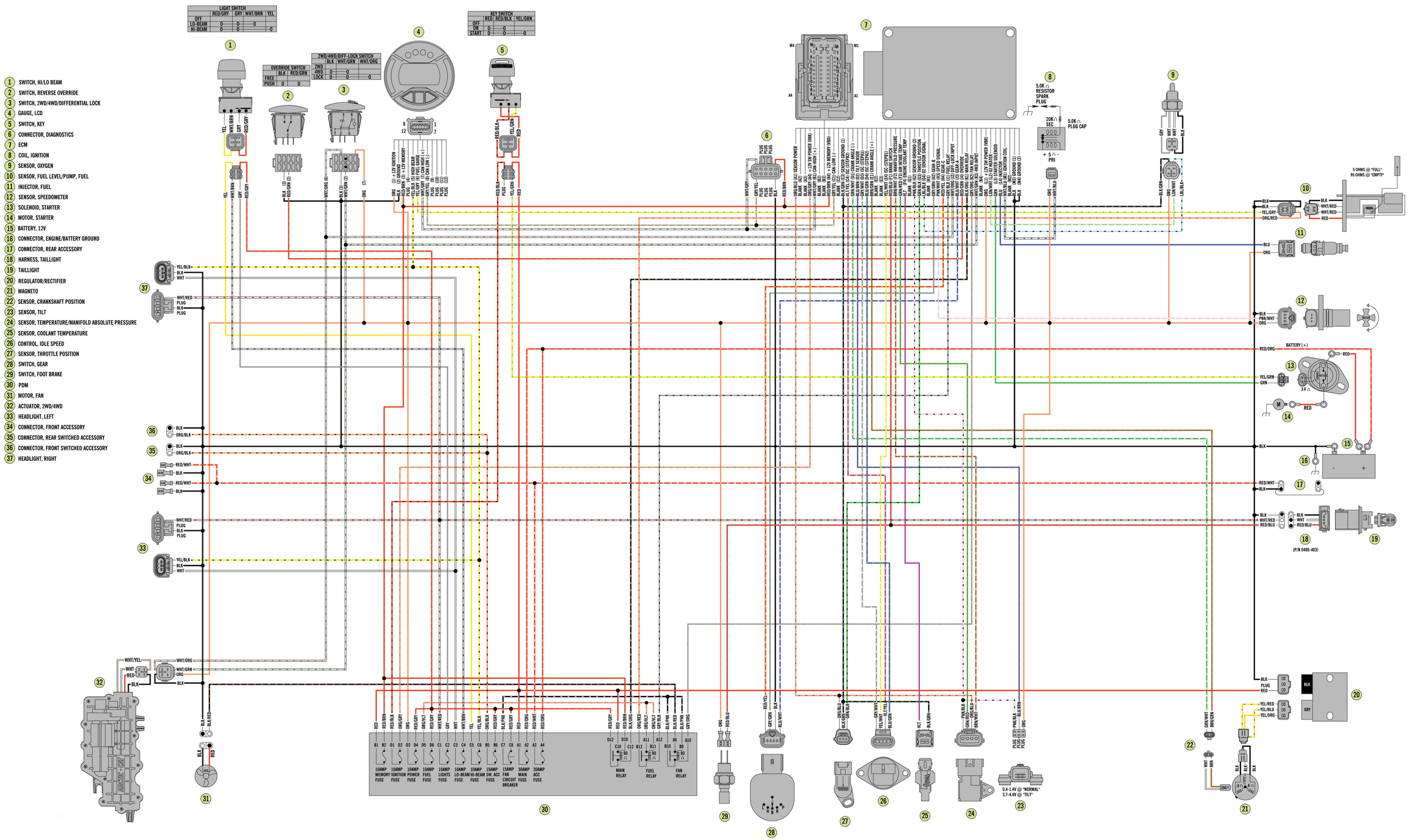

NOTES

1. CONNECTORS VIEWED FROM MATING SURFACE SIDE.
2. ● MOLDED CONNECTOR MALE PIN TERMINAL
   ○ MOLDED CONNECTOR FEMALE RECEPTACLE TERMINAL
3. GRY/YEL AND WHT/GRY ARE TWISTED PAIR.

Harness (p/n 0486-573) HDX 700 SE

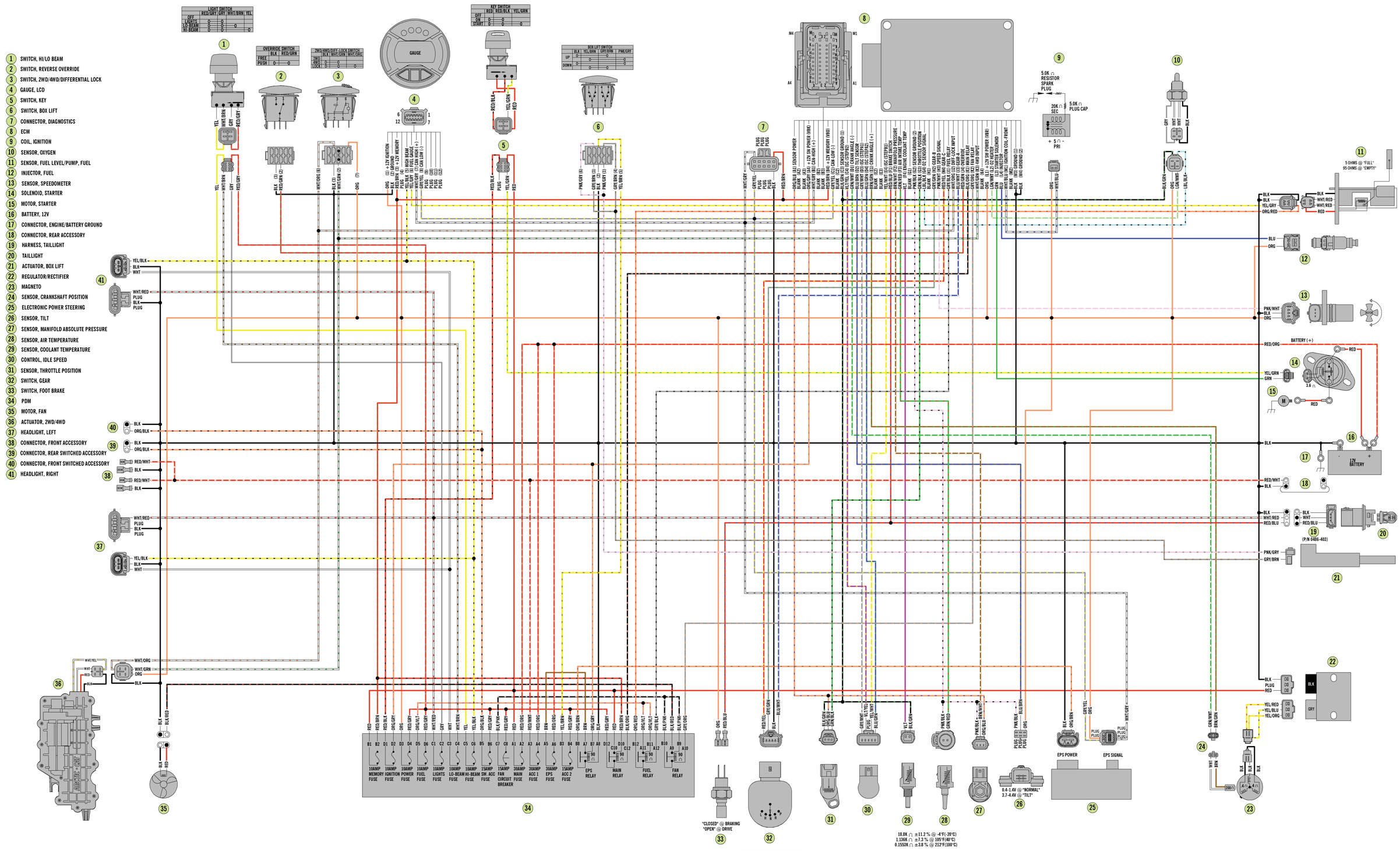

NOTES

1. CONNECTORS VIEWED FROM MATING SURFACE SIDE.
2. ● MOLDED CONNECTOR MALE PIN TERMINAL
   ○ MOLDED CONNECTOR FEMALE RECEPTACLE TERMINAL
3. GRY/YEL AND WHT/GRY ARE TWISTED PAIR.

Harness (p/n 0486-517) Prowler 700 XT (p/n 0486-551) HDX 700 XT

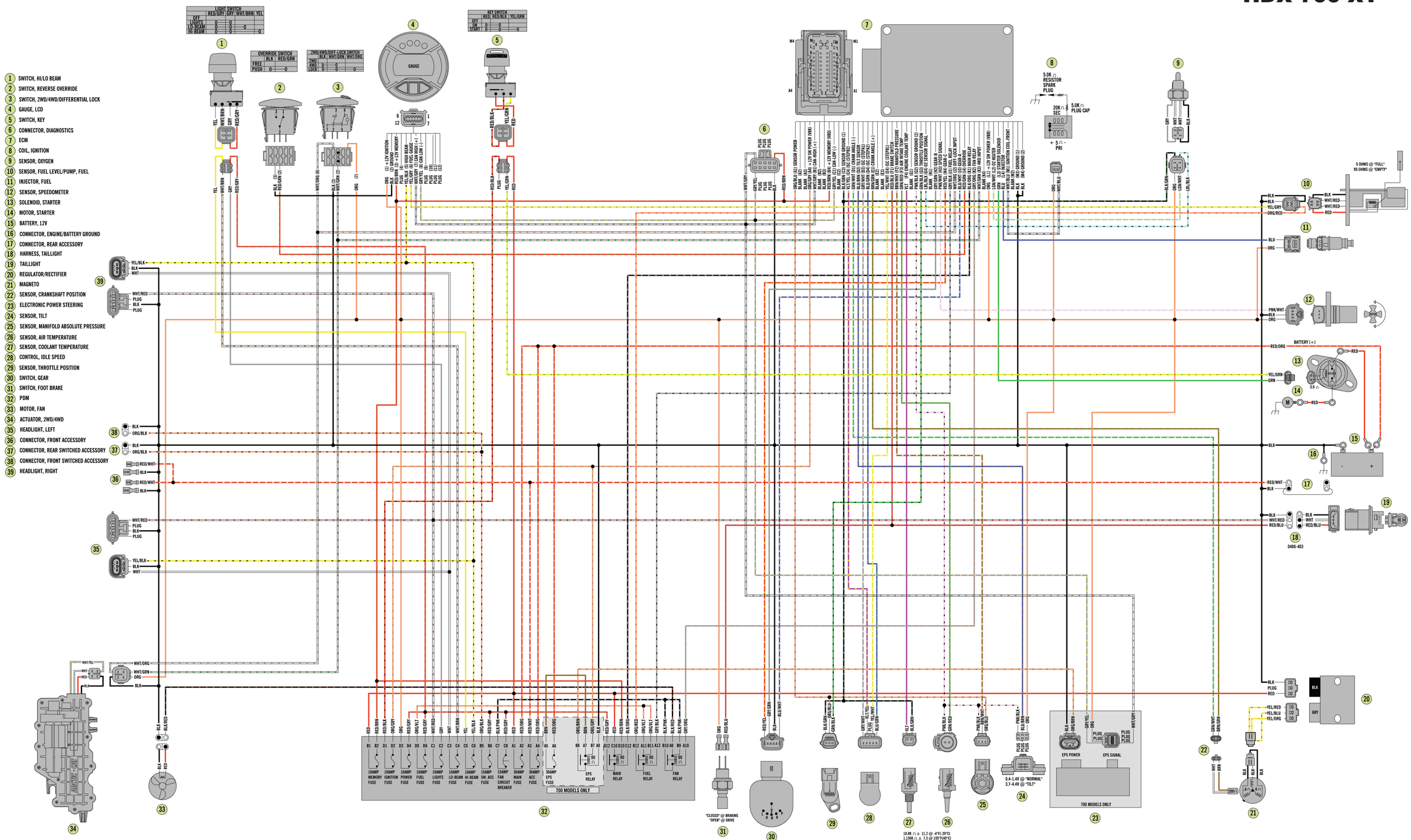

NOTES

1. CONNECTORS VIEWED FROM MATING SURFACE SIDE.
2. ● MOLDED CONNECTOR MALE PIN TERMINAL
   ○ MOLDED CONNECTOR FEMALE RECEPTACLE TERMINAL
3. GRY/YEL AND WHT/GRY ARE TWISTED PAIR.

Main Harness (p/n 0486-531) Prowler 1000 XT

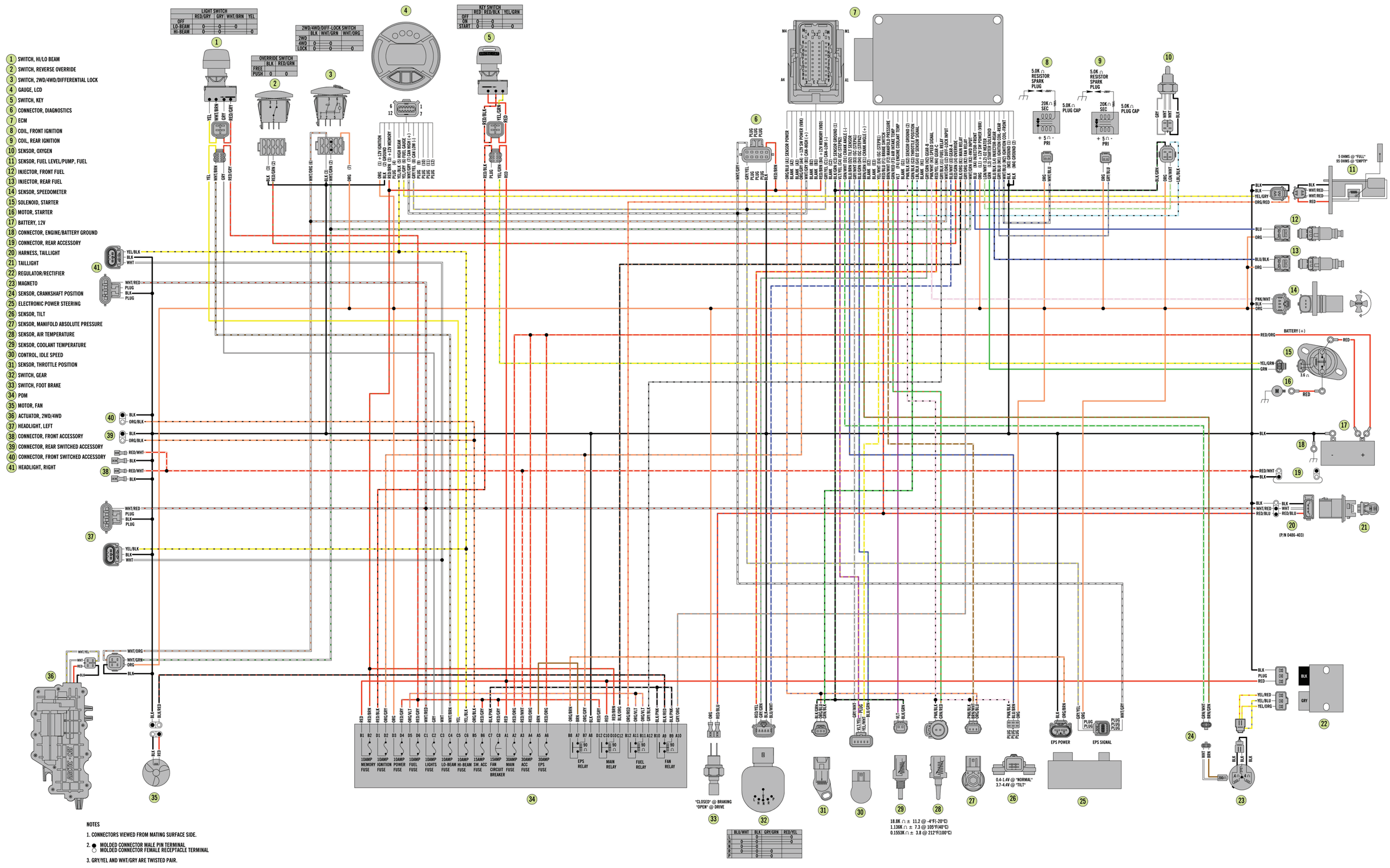

NOTES

1. CONNECTORS VIEWED FROM MATING SURFACE SIDE.
2. ● MOLDED CONNECTOR MALE PIN TERMINAL
   ○ MOLDED CONNECTOR FEMALE RECEPTACLE TERMINAL
3. GRY/YEL AND WHT/GRY ARE TWISTED PAIR.

Main Harness
(p/n 0486-524)
Wildcat X/X LTD/X SE
(p/n 0486-525)
Wildcat 4X

1. CONNECTOR, FRONT SWITCHED ACCESSORY
2. CONNECTORS, FRONT ACCESSORY
3. CONNECTORS, FRONT ACCESSORY
4. CONNECTORS, REAR ACCESSORY
5. SWITCH, KEY
6. GAUGE
7. SWITCH, HI/LO BEAM
8. SWITCH, 2WD/4WD/DIFFERENTIAL LOCK
9. SWITCH, OVERRIDE
10. CONNECTOR, DIAGNOSTICS
11. ECM
12. COIL, FRONT IGNITION
13. COIL, REAR IGNITION
14. SENSOR, OXYGEN
15. SENSOR, FUEL LEVEL/ PUMP, FUEL
16. INJECTOR, FRONT FUEL
17. INJECTOR, REAR FUEL
18. SENSOR, SPEEDOMETER
19. SOLENOID, STARTER
20. MOTOR, STARTER
21. CONNECTOR, ENGINE/BATTERY GROUND
22. BATTERY, 12V
23. CONNECTOR, REAR ACCESSORY
24. TAILLIGHT, RIGHT
25. TAILLIGHT, LEFT
26. REGULATOR/RECTIFIER
27. MAGNETO
28. SENSOR, CRANKSHAFT POSITION
29. SENSOR, TILT
30. SENSOR, AIR TEMPERATURE/MANIFOLD ABSOLUTE PRESSURE
31. SENSOR, COOLANT TEMPERATURE
32. CONTROL, IDLE SPEED
33. SENSOR, THROTTLE POSITION
34. SWITCH, GEAR POSITION
35. SWITCH, FOOT BRAKE PRESSURE
36. PDM
37. MOTOR, FAN
38. MOTOR, FAN
39. ACTUATOR, 2WD/4WD
40. HEADLIGHT, LOW BEAM LH
41. HEADLIGHT, HIGH BEAM LH
42. ELECTRONIC POWER STEERING

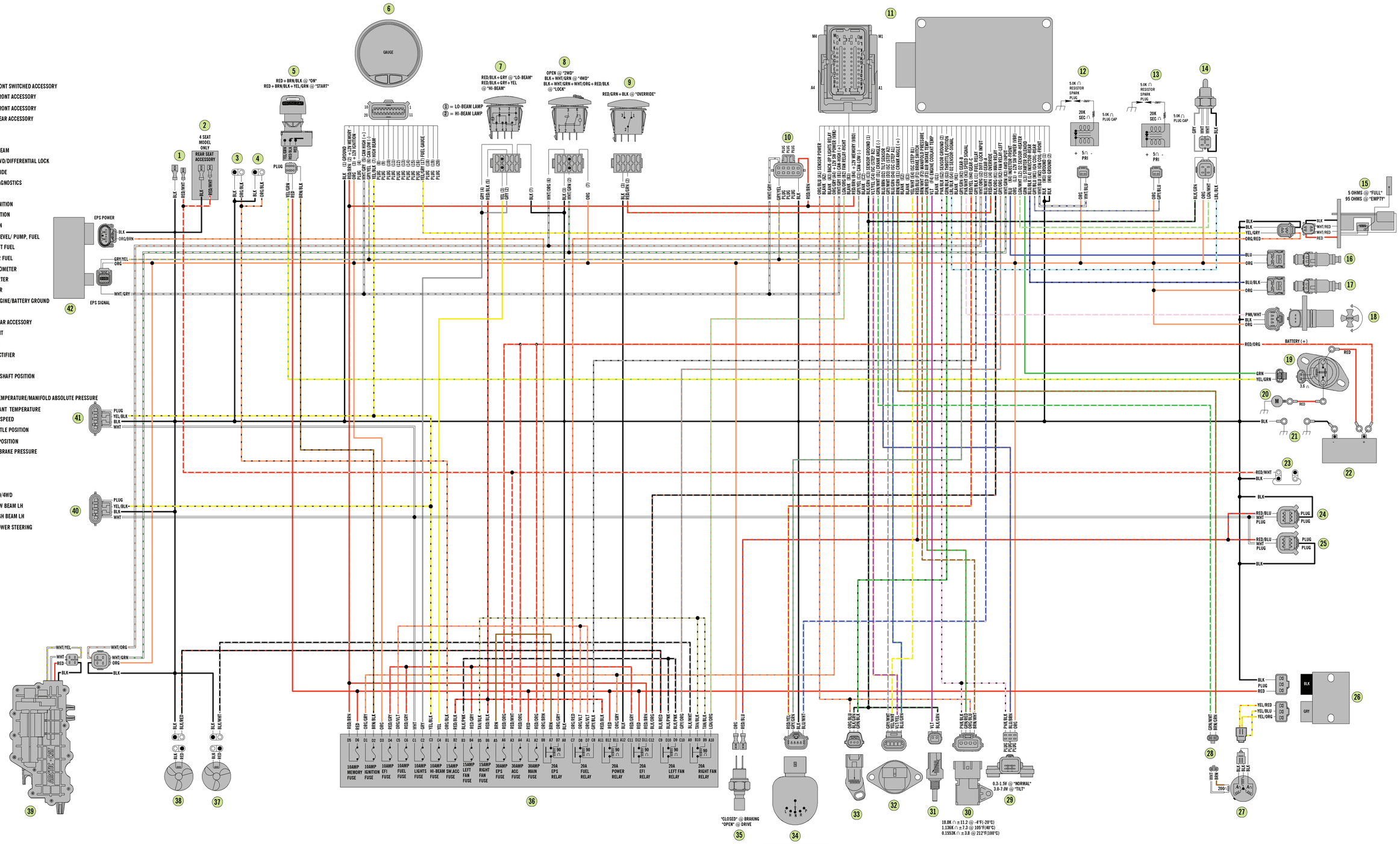

NOTES

1. CONNECTORS VIEWED FROM MATING SURFACE SIDE.
2. ● MOLDED CONNECTOR MALE PIN TERMINAL
   ○ MOLDED CONNECTOR FEMALE RECEPTACLE TERMINAL
3. GRY/YEL AND WHT/GRY ARE TWISTED PAIR.

Main Harness (p/n 0486-459) Wildcat Sport Wildcat Trail

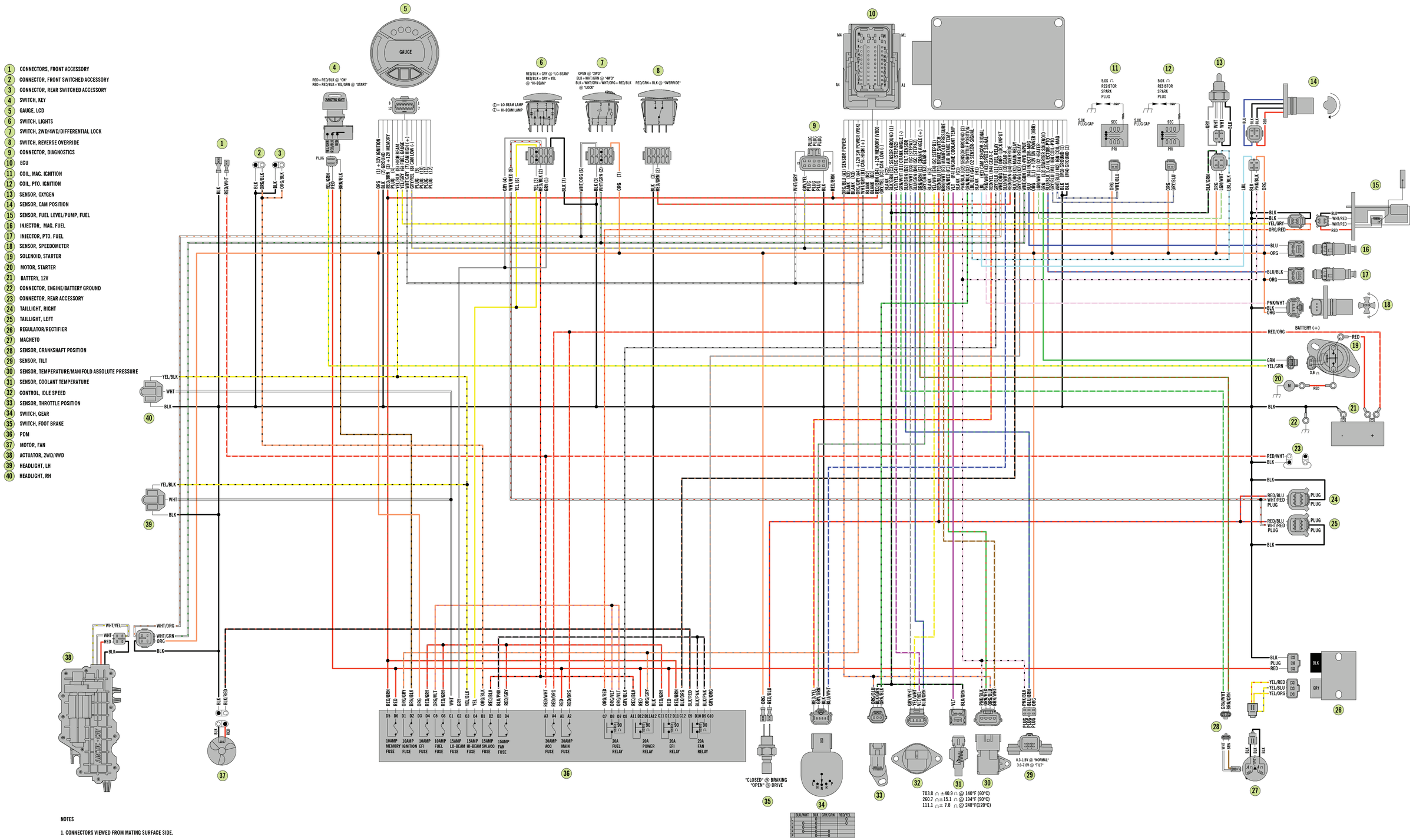

NOTES

1. CONNECTORS VIEWED FROM MATING SURFACE SIDE.

2. ● MOLDED CONNECTOR MALE PIN TERMINAL
   ○ MOLDED CONNECTOR FEMALE RECEPTACLE TERMINAL

3. GRY/YEL AND WHT/GRY ARE TWISTED PAIR.

Main Harness
(p/n 0486-493)
Wildcat Sport XT/LTD/RGSE
Wildcat Trail XT/LTD/SE

1. CONNECTORS, FRONT ACCESSORY
2. CONNECTOR, FRONT SWITCHED ACCESSORY
3. CONNECTORS, REAR SWITCHED ACCESSORY
4. SWITCH, KEY
5. GAUGE
6. SWITCH, HI/LO BEAM
7. SWITCH, 2WD/4WD/DIFFERENTIAL LOCK
8. SWITCH, OVERRIDE
9. CONNECTOR, DIAGNOSTICS
10. ECM
11. COIL, MAG. IGNITION
12. COIL, PTO. IGNITION
13. SENSOR, OXYGEN
14. SENSOR, CAM
15. SENSOR, FUEL LEVEL/PUMP, FUEL
16. INJECTOR, MAG. FUEL
17. INJECTOR, PTO. FUEL
18. SENSOR, SPEEDOMETER
19. SOLENOID, STARTER
20. MOTOR, STARTER
21. BATTERY, 12V
22. CONNECTOR, ENGINE/BATTERY GROUND
23. CONNECTOR, REAR ACCESSORY
24. TAILLIGHT, RIGHT
25. TAILLIGHT, LEFT
26. REGULATOR/RECTIFIER
27. MAGNETO
28. SENSOR, CRANKSHAFT POSITION
29. SENSOR, TILT
30. SENSOR, AIR TEMPERATURE/MANIFOLD ABSOLUTE PRESSURE
31. SENSOR, COOLANT TEMPERATURE
32. CONTROL, IDLE SPEED
33. SENSOR, THROTTLE POSITION
34. SWITCH, GEAR POSITION
35. SWITCH, FOOT BRAKE PRESSURE
36. PDM
37. MOTOR, FAN
38. ACTUATOR, 2WD/4WD
39. HEADLIGHT, LOW BEAM LH
40. HEADLIGHT, HIGH BEAM LH
41. ELECTRONIC POWER STEERING

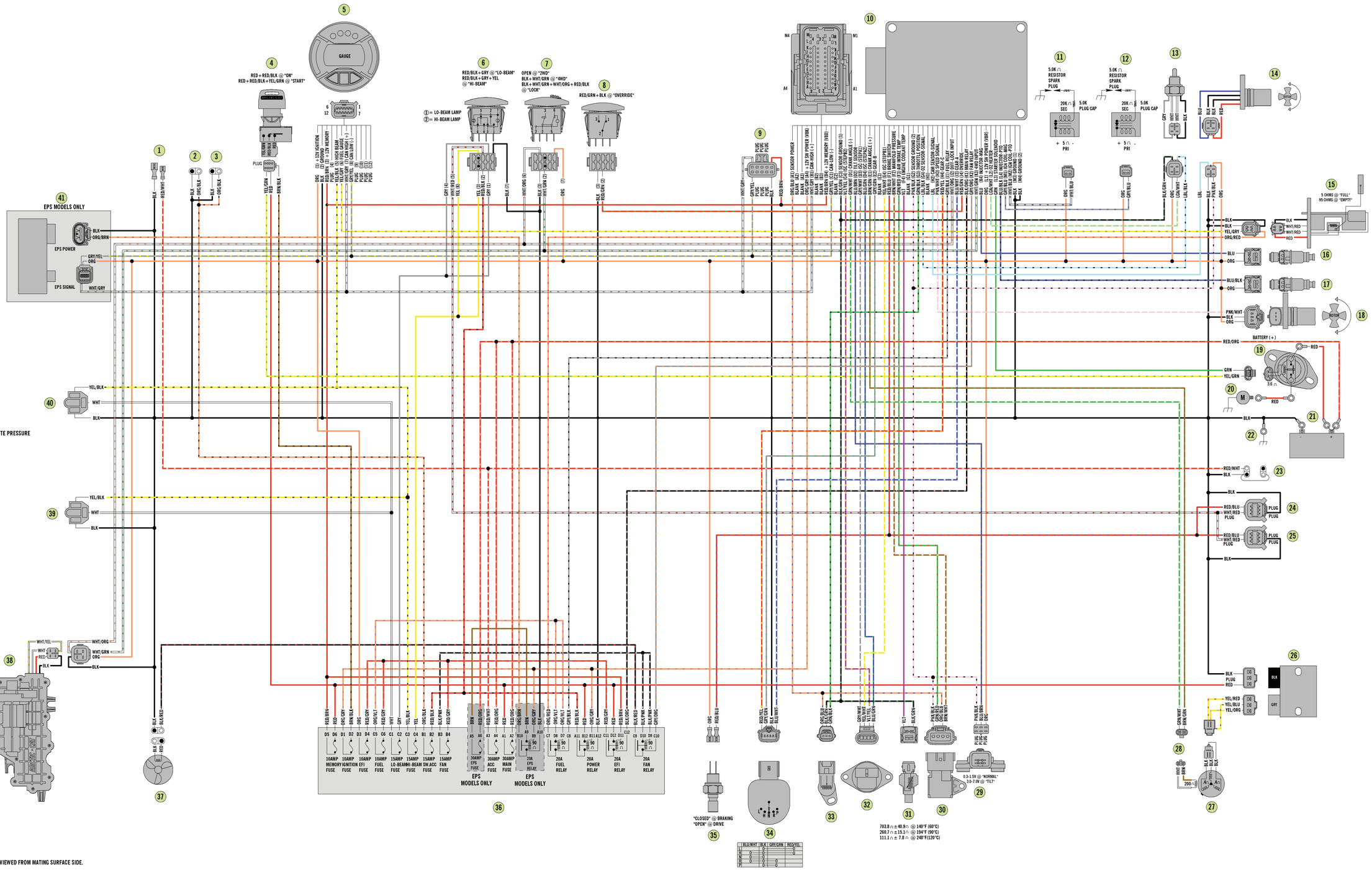

NOTES

1. CONNECTORS VIEWED FROM MATING SURFACE SIDE.
2. ● MOLDED CONNECTOR MALE PIN TERMINAL
   ○ MOLDED CONNECTOR FEMALE RECEPTACLE TERMINAL
3. GRY/YEL AND WHT/GRY ARE TWISTED PAIR.

NOTES